Management and Design of Databases (2231-1)

November 14, 2022

Bob's Home Repairs
Owner: Bob
12356 State Street
Bellevue, NE 68005

Dear Bob:

The following document outlines the relational database and Star Schema analytical database structures that have been created for your business. These databases will serve to streamline your customer, bid, job, invoicing, and vendor order data for easy access and analysis. The business concerns you addressed when bringing this job to our firm have been resolved through the use of these two databases.

The relational database and Star Schema will allow you to fully digitize your home repair business accounting processes. You will be able to track vendor orders and make timely payments to each individual vendor. These databases will allow you to organize your customer data based on specific bids, jobs, customer invoices, and customer payments. You will also be able to run reports on vendors that currently need payment and reports for customers who are slow in paying their bills.

The following documentation has been included in the next several pages:

- An Entity-Relationship diagram identifying the relational database entities, relationships, and attributes
- Relational database tables with sample data
- A Star Schema diagram identifying analytical database facts and dimensions
- Star Schema tables with sample data
- Sample queries that represent the types of data that can be retrieved from both the relational tables and the Star Schema.

Sincerely,
Mallory Young

E-R Diagram for Bob's Home Repairs:

Below is the E-R Diagram for Bob's Home Repairs business. The Entity Relationship(ER) Diagram is a flowchart that shows how entities are connected to each other within a system. Descriptions of the connections between the different tables are below the diagram.

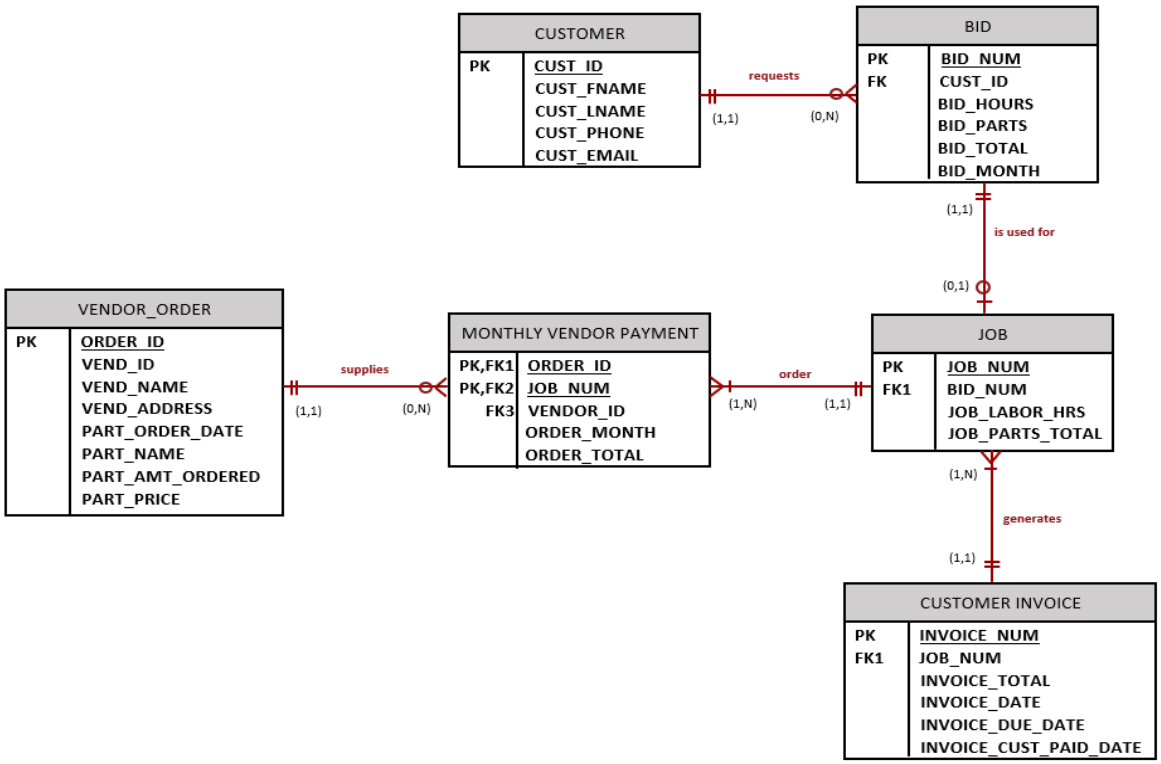

Relationship Descriptions:

Customer - Bid (1:N):

- Each customer can request more than one bid for more than one job, or the customer can have no current requests.
- Each bid is requested by only one customer.

Bid - Job (1:1):

- Each bid is used for only one job, but a bid might get rejected and not be used for a job.
- Each job has only one bid it is using.

Job - Customer Bill (1:N):

- Each job only generates one bill for a customer.
- Each bill can be generated from more than one job for a customer, but a bill must be generated from at least one job.

The Job Vendor relationship was a M:N relationship, so the Monthly Vendor Payment entity was created as an associative entity.

Monthly Vendor Payment - Job (1:N):

- Each job will require at least one order to a particular vendor or may require multiple orders from multiple vendors.
- Each order from a particular vendor is assigned to one particular job.

Vendor - Monthly Vendor Payment (1:N):

- Each vendor can supply multiple orders during a month, or no orders.
- Only one monthly payment is made to each specific vendor.

Create Table DDL for E-R Diagram:

Data Definition Language(DDL) is the definition of the language used to create the tables from the Entity Relationship Diagram. After the creation of the diagram(s) of the database structure, the next step is to create those tables with the correct attributes; below are the table creation scripts/statements.

CUSTOMER Table:

```
CREATE TABLE CUSTOMER (
    CUST_ID int NOT NULL PRIMARY KEY,
    CUST_FNAME varchar(50) NOT NULL,
    CUST_LNAME varchar(50) NOT NULL,
    CUST_PHONE varchar(12) NOT NULL, -- Example: 407-924-3167
    CUST_EMAIL varchar(255) NOT NULL, -- Required for billing
       );
```

BID Table:

```
CREATE TABLE BID (
    BID_NUM int NOT NULL PRIMARY KEY,
    CUST_ID int NOT NULL FOREIGN KEY (CUST_ID) REFERENCES CUSTOMER(CUST_ID) ON DELETE CASCADE,
    BID_HOURS decimal(7,2) NOT NULL, --Dollar amount up to $99,999.99
       -- Example: 12.50 hours estimated time for job completion...
       -- multiplied by Bob's labor rate of $45 per hour = $562.50 hours estimate
    BID_PARTS decimal(7,2) NOT NULL, -- Dollar amount up to $99,999.99
    BID_TOTAL decimal(7,2) NOT NULL, -- Dollar amount up to $99,999.99
    BID_MONTH Varchar(20) NOT NULL
       );
```

JOB Table:

```
CREATE TABLE JOB (
    JOB_NUM int NOT NULL PRIMARY KEY,
    BID_NUM int NOT NULL FOREIGN KEY (BID_NUM) REFERENCES BID(BID_NUM) ON DELETE CASCADE,
    JOB_LABOR_HRS decimal(7,2) NOT NULL, --Dollar amount up to $99,999.99
       -- Example: 15.75 hours total time for job completion...
       -- multiplied by Bob's labor rate of $45 per hour = $708.75 hours estimate
    JOB_PARTS_TOTAL decimal(7,2) NOT NULL, -- Dollar amount up to $99,999.99
       );
```

CUSTOMER_INVOICE Table:

```
CREATE TABLE CUSTOMER_INVOICE (
    INVOICE_NUM int NOT NULL PRIMARY KEY,
    JOB_NUM int NOT NULL FOREIGN KEY (JOB_NUM) REFERENCES JOB(JOB_NUM) ON DELETE CASCADE,
    INVOICE_TOTAL decimal(7,2) NOT NULL, -- Dollar amount up to $99,999.99
    INVOICE_DATE date NOT NULL,
    INVOICE_DUE_DATE date NOT NULL,
    INVOICE_CUST_PAID_DATE date
       );
```

VENDOR_ORDER Table:

```
CREATE TABLE VENDOR_ORDER (
    ORDER_ID int NOT NULL PRIMARY KEY,
    VEND_ID int NOT NULL,
    VEND_NAME varchar(50) NOT NULL,
    VEND_ADDRESS varchar(255) NOT NULL, -- Required for billing
```

```
    PART_ORDER_DATE date NOT NULL, -- Required for billing
    PART_NAME varchar(255) NOT NULL,
    PART_AMT_ORDERED int NOT NULL, -- the amount of items ordered (Ex: 2 boxes of nails ordered)
    PART_PRICE decimal(7,2) NOT NULL, -- Dollar amount up to $99,999.99 (Ex: how much for 2 boxes of
nails)
       );
```

MONTHLY_VENDOR_PAYMENT Table:

```
CREATE TABLE MONTHLY_VENDOR_PAYMENT (
    ORDER_ID int NOT NULL,
    JOB_NUM int NOT NULL,
    VEND_ID int NOT NULL,
       ORDER_MONTH int NOT NULL, -- What month did the order occur? (January (01) through December
(12))
    ORDER_TOTAL decimal(7,2) NOT NULL, -- Dollar amount up to $99,999.99 (total dollar amount of each
order, all parts ordered)
    PRIMARY KEY (ORDER_ID, JOB_NUM),
    FOREIGN KEY (ORDER_ID) REFERENCES VENDOR_ORDER(ORDER_ID) ON DELETE CASCADE,
    FOREIGN KEY (JOB_NUM) REFERENCES JOB(JOB_NUM) ON DELETE CASCADE
       );
```

INSERT Statements for E-R Diagram:

The Insert Statements are used to populate data into the tables created. This information includes customer and vendor details, the price and quantity of materials purchased and other pertinent information to a job. There are also screenshots attached that show what the data looks like in the database after the insert statements have been executed.

CUSTOMER Table:

```
INSERT CUSTOMER VALUES(155, 'James', 'Anderson', '407-924-3165', 'janderson55@gmail.com')
INSERT CUSTOMER VALUES(142, 'Rebecca', 'Tennant', '321-544-3510', 'Rebecca.E.Tennant@yahoo.com')
INSERT CUSTOMER VALUES(081, 'Trey', 'Williams', '513-245-8156', 'bballstar1@hotmail.com')
INSERT CUSTOMER VALUES(076, 'Allison', 'Zeigler', '321-464-1968', 'a.zeigler@comcast.com')
INSERT CUSTOMER VALUES(120, 'Brett', 'Forward', '407-843-4742', 'movingforwardB@gmail.com')
INSERT CUSTOMER VALUES(156, 'Ralph', 'Senior', '810-854-0205', 'ralph.senior@yahoo.com')
INSERT CUSTOMER VALUES(157, 'David', 'Washington', '250-528-0937', 'dwash@gmail.com')
INSERT CUSTOMER VALUES(158, 'Maria', 'Arbough', '658-995-7845', 'marbough@icloud.com')
INSERT CUSTOMER VALUES(159, 'Anne', 'Smith', '744-888-5308', 'smithanne@outlook.com')
INSERT CUSTOMER VALUES(160, 'Larry', 'Ramoras', '416-803-3120', 'l.ramoras@yahoo.com')
```

BID Table:

```
INSERT BID VALUES(325, 155, 50.00, 155.50, 205.50, '10')
INSERT BID VALUES(316, 142, 120.00, 125.00, 245.00, '8')
INSERT BID VALUES(208, 081, 325.00, 224.75, 549.75, '10')
INSERT BID VALUES(199, 076, 145.00, 180.00, 325.00, '9')
INSERT BID VALUES(279, 120, 35.00, 45.50, 80.50, '8')
INSERT BID VALUES(326, 156, 35.00, 387.50, 422.50, '9')
INSERT BID VALUES(327, 157, 85.00, 493.88, 578.88, '10')
INSERT BID VALUES(328, 158, 96.00, 515.45, 611.45, '10')
INSERT BID VALUES(329, 159, 18.00, 145.11, 163.11, '10')
INSERT BID VALUES(330, 160, 13.00, 76.05, 89.05, '7')
```

JOB Table:

```
INSERT JOB VALUES(614, 325, 75.50, 155.50)
INSERT JOB VALUES(600, 316, 115.00, 148.00)
INSERT JOB VALUES(518, 208, 300.00, 217.50)
INSERT JOB VALUES(505, 199, 145.00, 182.50)
INSERT JOB VALUES(586, 279, 40.00, 79.50)
INSERT JOB VALUES(615, 326, 40.50, 387.50)
INSERT JOB VALUES(616, 327, 75.00, 420.15)
INSERT JOB VALUES(617, 328, 96.00, 520.45)
INSERT JOB VALUES(618, 329, 25.00, 145.11)
INSERT JOB VALUES(619, 330, 13.00, 74.10)
```

CUSTOMER_INVOICE Table:

```
INSERT CUSTOMER_INVOICE VALUES(655, 614, 231.00, '08-13-2022', '09-13-2022', '09-25-2022')
INSERT CUSTOMER_INVOICE VALUES(602, 600, 263.00, '09-12-2022', '10-12-2022', '09-30-2022')
INSERT CUSTOMER_INVOICE VALUES(556, 518, 517.50, '08-05-2022', '09-05-2022', NULL)
INSERT CUSTOMER_INVOICE VALUES(530, 505, 327.50, '10-20-2022', '11-20-2022', NULL)
INSERT CUSTOMER_INVOICE VALUES(592, 586, 119.50, '10-03-2022', '11-03-2022', '10-14-2022')
INSERT CUSTOMER_INVOICE VALUES(656, 615, 428.00, '09-14-2022', '10-14-2022', '09-29-2022')
INSERT CUSTOMER_INVOICE VALUES(657, 616, 495.65, '10-18-2022', '11-18-2022', '10-25-2022')
INSERT CUSTOMER_INVOICE VALUES(658, 617, 616.45, '10-24-2022', '11-24-2022', NULL)
INSERT CUSTOMER_INVOICE VALUES(659, 618, 170.11, '10-05-2022', '11-05-2022', NULL)
INSERT CUSTOMER_INVOICE VALUES(670, 619, 87.10, '07-01-2022', '08-01-2022', '08-18-2022')
```

VENDOR_ORDER Table:

```
INSERT VENDOR_ORDER VALUES(1, 15264, 'Kingston Lumber', '1175 Lafayette St.', '8-29-2022', 'framing
nails', 2, 45.00)
INSERT VENDOR_ORDER VALUES(2, 13815, 'Home Depot', '365 N. Umbridge Lane', '9-1-2022', 'concrete', 1,
150.00)
INSERT VENDOR_ORDER VALUES(3, 15265, 'Ace Hardware', '1761 Ritchie Station ct.', '7-15-2022', '4-stage
AC air filters', 1, 25.00)
INSERT VENDOR_ORDER VALUES(4, 29582, 'Steelworks', '798 Willis Way', '10-08-2022', 'diamond plating',
1, 148.00)
INSERT VENDOR_ORDER VALUES(5, 15342, 'Lowes', '5138 Western Ave.', '09-01-2022', '2x4 plywood', 5,
75.00)
INSERT VENDOR_ORDER VALUES(6, 15264, 'Kingston Lumber', '1175 Lafayette St.', '8-29-2021', 'framing
nails', 2, 45.00)
INSERT VENDOR_ORDER VALUES(7, 15265, 'Ace Hardware', '1761 Ritchie Station ct.', '09-1-2022',
'finishing trim', 5, 12.00)
INSERT VENDOR_ORDER VALUES(8, 15266, 'Pyles Lumber Company', '1175 Lafayette St.', '09-2-2022',
'plywood sheets', 10, 55.00)
INSERT VENDOR_ORDER VALUES(9, 15264, 'Kingston Lumber', '1175 Lafayette St.', '09-7-2022', '2-½" wood
screws', 1, 25.00)
INSERT VENDOR_ORDER VALUES(10, 15265, 'Ace Hardware', '1761 Ritchie Station ct.', '09-7-2022', 'liquid
nail', 2, 8.00)
INSERT VENDOR_ORDER VALUES(11, 15266, 'Pyles Lumber Company', '4161 Burkesville Road', '09-12-2021',
'2x4 studs', 20, 15.00)
```

MONTHLY_VENDOR_PAYMENT Table:

```
INSERT MONTHLY_VENDOR_PAYMENT VALUES(1, 614, 15264,  08, 282.55)
INSERT MONTHLY_VENDOR_PAYMENT VALUES(2, 600, 13815, 09, 175.48)
INSERT MONTHLY_VENDOR_PAYMENT VALUES(3, 518, 00264, 07, 82.32)
INSERT MONTHLY_VENDOR_PAYMENT VALUES(4, 505, 29582, 10, 202.00)
INSERT MONTHLY_VENDOR_PAYMENT VALUES(5, 586, 15342, 09, 112.29)
INSERT MONTHLY_VENDOR_PAYMENT VALUES(6, 615, 15265, 08, 50.00)
INSERT MONTHLY_VENDOR_PAYMENT VALUES(7, 616, 15266, 09, 350.00)
```

```sql
INSERT MONTHLY_VENDOR_PAYMENT VALUES(8, 617, 15264, 09, 25.00)
INSERT MONTHLY_VENDOR_PAYMENT VALUES(9, 618, 15265, 09, 16.00)
INSERT MONTHLY_VENDOR_PAYMENT VALUES(10, 619, 15266, 09, 200.00)
```

CUSTOMER Table:

	CUST_ID	CUST_FNAME	CUST_LNAME	CUST_PHONE	CUST_EMAIL
1	76	Allison	Zeigler	321-464-1968	a.zeigler@comcast.com
2	81	Trey	Williams	513-245-8156	bballstar1@hotmail.com
3	120	Brett	Forward	407-843-4742	movingforwardB@gmail.com
4	142	Rebecca	Tennant	321-544-3510	Rebecca.E.Tennant@yahoo.com
5	155	James	Anderson	407-924-3165	janderson55@gmail.com
6	156	Ralph	Senior	810-854-0205	ralph.senior@yahoo.com
7	157	David	Washington	250-528-0937	dwash@gmail.com
8	158	Maria	Arbough	658-995-7845	marbough@icloud.com
9	159	Anne	Smith	744-888-5308	smithanne@outlook.com
10	160	Larry	Ramoras	416-803-3120	l.ramoras@yahoo.com

BID Table:

	BID_NUM	CUST_ID	BID_HOURS	BID_PARTS	BID_TOTAL	BID_MONTH
1	199	76	145.00	180.00	325.00	9
2	208	81	325.00	224.75	549.75	10
3	279	120	35.00	45.50	80.50	8
4	316	142	120.00	125.00	245.00	8
5	325	155	50.00	155.50	205.50	10
6	326	156	35.00	387.50	422.50	9
7	327	157	85.00	493.88	578.88	10
8	328	158	96.00	515.45	611.45	10
9	329	159	18.00	145.11	163.11	10
10	330	160	13.00	76.05	89.05	7

JOB Table:

	JOB_NUM	BID_NUM	JOB_LABOR_HRS	JOB_PARTS_TOTAL
1	505	199	145.00	182.50
2	518	208	300.00	217.50
3	586	279	40.00	79.50
4	600	316	115.00	148.00
5	614	325	75.50	155.50
6	615	326	40.50	387.50
7	616	327	75.00	420.15
8	617	328	96.00	520.45
9	618	329	25.00	145.11
10	619	330	13.00	74.10

CUSTOMER_INVOICE Table:

	INVOICE_NUM	JOB_NUM	INVOICE_TOTAL	INVOICE_DATE	INVOICE_DUE_DATE	INVOICE_CUST_PAID_DATE
1	530	505	327.50	2022-10-20	2022-11-20	NULL
2	556	518	517.50	2022-08-05	2022-09-05	NULL
3	592	586	119.50	2022-10-03	2022-11-03	2022-10-14
4	602	600	263.00	2022-09-12	2022-10-12	2022-09-30
5	655	614	231.00	2022-08-13	2022-09-13	2022-09-25
6	656	615	428.00	2022-09-14	2022-10-14	2022-09-29
7	657	616	495.65	2022-10-18	2022-11-18	2022-10-25
8	658	617	616.45	2022-10-24	2022-11-24	NULL
9	659	618	170.11	2022-10-05	2022-11-05	NULL
10	670	619	87.10	2022-07-01	2022-08-01	2022-08-18

VENDOR_ORDER Table:

	ORDER_ID	VEND_ID	VEND_NAME	VEND_ADDRESS	PART_ORDER_DATE	PART_NAME	PART_AMT_ORDERED	PART_PRICE
1	1	15264	Kingston Lumber	1175 Lafayette St.	2022-08-29	framing nails	2	45.00
2	2	13815	Home Depot	365 N. Umbridge Lane	2022-09-01	concrete	1	150.00
3	3	15265	Ace Hardware	1761 Ritchie Station ct.	2022-07-15	4-stage AC air filters	1	25.00
4	4	29582	Steelworks	798 Willis Way	2022-10-08	diamond plating	1	148.00
5	5	15342	Lowes	5138 Western Ave.	2022-09-01	2x4 plywood	5	75.00
6	6	15264	Kingston Lumber	1175 Lafayette St.	2021-08-29	framing nails	2	45.00
7	7	15265	Ace Hardware	1761 Ritchie Station ct.	2022-09-01	finishing trim	5	12.00
8	8	15266	Pyles Lumber Company	1175 Lafayette St.	2022-09-02	plywood sheets	10	55.00
9	9	15264	Kingston Lumber	1175 Lafayette St.	2022-09-07	2-½" wood screws	1	25.00
10	10	15265	Ace Hardware	1761 Ritchie Station ct.	2022-09-07	liquid nail	2	8.00
11	11	15266	Pyles Lumber Company	4161 Burkesville Road	2021-09-12	2x4 studs	20	15.00

MONTHLY_VENDOR_PAYMENT Table:

	ORDER_ID	JOB_NUM	VEND_ID	ORDER_MONTH	ORDER_TOTAL
1	1	614	15264	8	282.55
2	2	600	13815	9	175.48
3	3	518	264	7	82.32
4	4	505	29582	10	202.00
5	5	586	15342	9	112.29
6	6	615	15265	8	50.00
7	7	616	15266	9	350.00
8	8	617	15264	9	25.00
9	9	618	15265	9	16.00
10	10	619	15266	9	200.00

Star Schema Diagram:

A Star Schema Diagram is a database structure that has one large table in the center with smaller tables that contain attributes about the data.

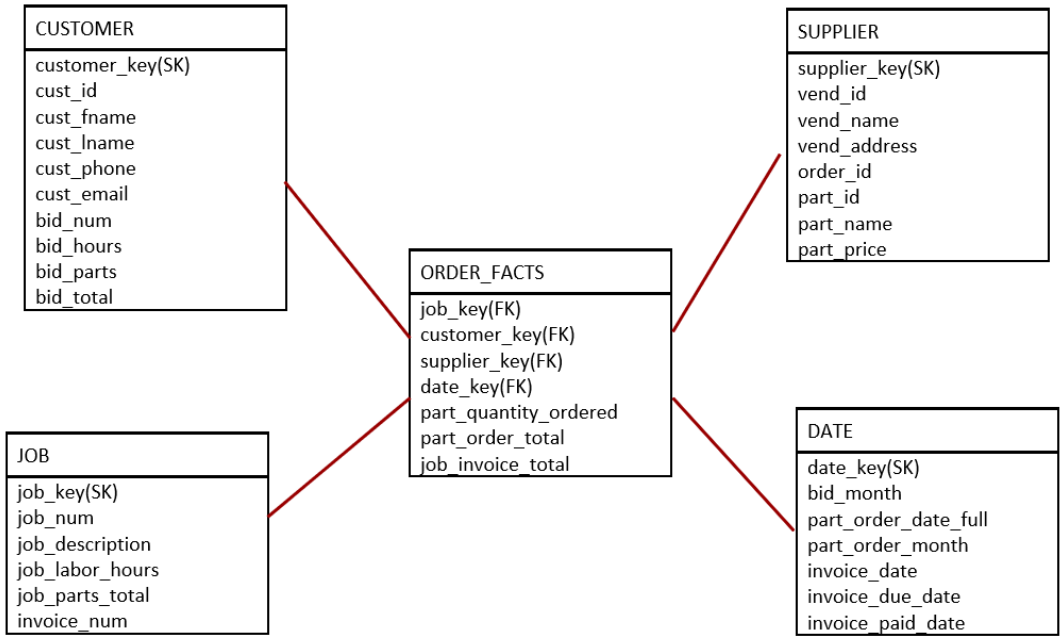

Create Table DDL for Star Schema:

Data Definition Language(DDL) is the definition of the language used to create the tables from the Star Schema Diagram. After the creation of the diagram(s) of the database structure, the next step is to create those tables with the correct attributes; below are the table creation scripts/statements.

```
IF OBJECT_ID(N'dbo.JOB', N'U') IS NOT NULL
   DROP TABLE [dbo].[JOB];

go

create table JOB (
job_key int primary key,
job_num int,
job_description varchar(60),
job_labor_hours money,
job_parts_total money,
invoice_num int)

go

IF OBJECT_ID(N'dbo.CUSTOMER', N'U') IS NOT NULL
   DROP TABLE [dbo].[CUSTOMER];

go

create table CUSTOMER (
customer_key int primary key,
cust_id int,
cust_fname varchar(30),
cust_lname varchar(30),
cust_phone varchar(30),
cust_email varchar(60),
bid_num int,
bid_hours money,
bid_parts money,
bid_total money)

go

IF OBJECT_ID(N'dbo.SUPPLIER', N'U') IS NOT NULL
   DROP TABLE [dbo].[SUPPLIER];

go

create table SUPPLIER (
supplier_key int primary key,
vend_id int,
vend_name varchar(120),
vend_address varchar(250),
order_id int,
part_id int,
part_name varchar(30),
part_price money)

go

IF OBJECT_ID(N'dbo.DATE', N'U') IS NOT NULL
   DROP TABLE [dbo].[DATE];

go
```

```sql
create table DATE (
date_key int primary key,
bid_month varchar(30),
part_order_date_full varchar(30),
part_order_month varchar(30),
invoice_date varchar(30),
invoice_due_date varchar(30),
invoice_paid_date varchar(30))

go

IF OBJECT_ID(N'dbo.ORDER_FACTS', N'U') IS NOT NULL
   DROP TABLE [dbo].[ORDER_FACTS];

go

create table ORDERFACTS (
job_key int,
customer_key int,
supplier_key int,
date_key int,
part_quantity_ordered int,
part_order_total money,
job_invoice_total money,
primary key (job_key, customer_key, supplier_key, date_key),
foreign key (job_key) REFERENCES JOB(job_key),
foreign key (customer_key) REFERENCES CUSTOMER(customer_key),
foreign key (supplier_key) REFERENCES SUPPLIER(supplier_key),
foreign key (date_key) REFERENCES DATE(date_key))

go
```

INSERT Statements for Star Schema:

Below are insert statements used to insert data into the Star Schema that was created in a previous section of this document. There are also screenshots of what the data looks like after the insert statements are executed.

```sql
INSERT INTO CUSTOMER VALUES(1, 76, 'Allison', 'Zeigler', '321-464-1968', 'a.zeigler@comcast.com', 199, 145.00, 180.00, 325.00)
INSERT INTO CUSTOMER VALUES(2, 81, 'Larry', 'Ramoras', '416-803-3120', 'l.ramoras@yahoo.com', 330, 13.00, 76.05, 89.05)
INSERT INTO CUSTOMER VALUES(3, 158, 'Maria', 'Arbough', '658-995-7845', 'marbough@icloud.com', 328, 96.00, 515.45, 611.45)
INSERT INTO CUSTOMER VALUES(4, 142, 'Rebecca', 'Tennant', '321-544-3510', 'Rebecca.E.Tennant@yahoo.com', 316, 120.00, 125.00, 245.00)


INSERT INTO JOB VALUES(1, 505, 'yard perimeter fencing', 145.00, 182.50, 530)
INSERT INTO JOB VALUES(2, 619, 'kitchen cabinet repair', 13.00, 74.10, 670)
INSERT INTO JOB VALUES(3, 617, 'back deck install', 96.00, 520.45, 658)
INSERT INTO JOB VALUES(4, 600, 'driveway paving', 115.00, 148.00, 602)

INSERT INTO SUPPLIER VALUES(1, 15264, 'Kingston Lumber', '1175 Lafayette St.', 1, 13425689, 'framing nails', 15.00)
INSERT INTO SUPPLIER VALUES(2, 15265, 'Ace Hardware', '1761 Ritchie Station Ct.', 10, 15832456, 'liquid nail', 8.00)
INSERT INTO SUPPLIER VALUES(3, 15264, 'Kingston Lumber', '1175 Lafayette St.', 9, 13611879, '2-½” wood screws', 25.00)
INSERT INTO SUPPLIER VALUES(4, 13815, 'Home Depot', '365 N. Umbridge Lane', 2, 32615482, 'concrete', 150.00)
```

```sql
INSERT INTO DATE VALUES(1, 8, '2022-08-29', 'August', '2022-10-20', '2022-22-11', NULL)
INSERT INTO DATE VALUES(2, 6, '2022-06-07', 'September', '2022-07-01', '2022-08-01', '2022-08-18')
INSERT INTO DATE VALUES(3, 9, '2022-09-07', 'September', '2022-10-24', '2022-11-24', NULL)
INSERT INTO DATE VALUES(4, 9, '2022-09-01', 'September', '2022-09-12', '2022-10-12', '2022-09-30')


INSERT INTO ORDERFACTS VALUES(1, 1, 1, 1, 12, 180.00, 327.50)
INSERT INTO ORDERFACTS VALUES(2, 2, 2, 2, 2, 16.00, 87.10)
INSERT INTO ORDERFACTS VALUES(3, 3, 3, 3, 1, 25.00, 616.45)
INSERT INTO ORDERFACTS VALUES(4, 4, 4, 4, 1, 150.00, 263.00)
```

Customer Table

	customer_key	cust_id	cust_fname	cust_lname	cust_phone	cust_email	bid_num	bid_hours	bid_parts	bid_total
1	1	76	Allison	Zeigler	321-464-1968	a.zeigler@comcast.com	199	145.00	180.00	325.00
2	2	81	Larry	Ramoras	416-803-3120	l.ramoras@yahoo.com	330	13.00	76.05	89.05
3	3	158	Maria	Arbough	658-995-7845	marbough@icloud.com	328	96.00	515.45	611.45
4	4	142	Rebecca	Tennant	321-544-3510	Rebecca.E.Tennant@yahoo.com	316	120.00	125.00	245.00

Job Table

	job_key	job_num	job_description	job_labor_hours	job_parts_total	invoice_num
1	1	505	yard perimeter fencing	145.00	182.50	530
2	2	619	kitchen cabinet repair	13.00	74.10	670
3	3	617	back deck install	96.00	520.45	658
4	4	600	driveway paving	115.00	148.00	602

Supplier Table

	supplier_key	vend_id	vend_name	vend_address	order_id	part_id	part_name	part_price
1	1	15264	Kingston Lumber	1175 Lafayette St.	1	13425689	framing nails	15.00
2	2	15265	Ace Hardware	1761 Ritchie Station Ct.	10	15832456	liquid nail	8.00
3	3	15264	Kingston Lumber	1175 Lafayette St.	9	13611879	2-½" wood ...	25.00
4	4	13815	Home Depot	365 N. Umbridge Lane	2	32615482	concrete	150.00

Date Table

	date_key	bid_month	part_order_date_full	part_order_month	invoice_date	invoice_due_date	invoice_paid_date
1	1	8	2022-08-29	August	2022-10-20	2022-22-11	NULL
2	2	6	2022-06-07	September	2022-07-01	2022-08-01	2022-08-18
3	3	9	2022-09-07	September	2022-10-24	2022-11-24	NULL
4	4	9	2022-09-01	September	2022-09-12	2022-10-12	2022-09-30

OrderFacts Table

	job_key	customer_key	supplier_key	date_key	part_quantity_ordered	part_order_total	job_invoice_total
1	1	1	1	1	12	180.00	327.50
2	2	2	2	2	2	16.00	87.10
3	3	3	3	3	1	25.00	616.45
4	4	4	4	4	1	150.00	263.00

Relational Table Sample Queries:

Relational table queries are used to display information from the database tables. Below are some examples of queries that can be used by your business.

1. **List the names of the customers who were provided bids last month.**

   SQL Script:... (*Last month being identified as 10-October)*

```
SELECT
   CUST_FNAME + ' ' + CUST_LNAME AS Customer, BID_MONTH
FROM
   CUSTOMER,
   BID
WHERE
   BID.CUST_ID = CUSTOMER.CUST_ID AND
       BID_MONTH = 10
```

   Execution Screenshot:

	Customer	BID_MONTH
1	Allison Zeigler	10
2	Brett Forward	10
3	David Washington	10
4	Maria Arbough	10
5	Anne Smith	10

2. **List the unique names of Bob's suppliers.**

   SQL Script:

```
SELECT DISTINCT VEND_NAME
FROM VENDOR_ORDER
```

   Execution Screenshot:

	VEND_NAME
1	Ace Hardware
2	Home Depot
3	Kingston Lumber
4	Lowes
5	Pyles Lumber Company
6	Steelworks

3. **List the names of the suppliers and the total amount owed to any unpaid suppliers. Then write a separate query to display the days past due for each supplier.**

   Part 1 SQL Script:... *(Bob has not yet paid his Vendors for the months of 09-September and 10-October)*

```
SELECT
   VEND_NAME, SUM(ORDER_TOTAL) AS AmountOwed
FROM
   MONTHLY_VENDOR_PAYMENT,
   VENDOR_ORDER
WHERE
   VENDOR_ORDER.VEND_ID = MONTHLY_VENDOR_PAYMENT.VEND_ID AND
   ORDER_MONTH >8
GROUP BY VEND_NAME
```

Execution Screenshot:

	VEND_NAME	AmountDue
1	Ace Hardware	48.00
2	Home Depot	175.48
3	Kingston Lumber	75.00
4	Lowes	112.29
5	Pyles Lumber Company	1100.00
6	Steelworks	202.00

Part 2 SQL Script:... Days Past Due

```
SELECT
   VEND_NAME, (ORDER_MONTH -12) * 10 AS DaysPastDue
FROM
   MONTHLY_VENDOR_PAYMENT,
   VENDOR_ORDER
WHERE
   VENDOR_ORDER.VEND_ID = MONTHLY_VENDOR_PAYMENT.VEND_ID AND
   ORDER_MONTH >8
       GROUP BY VEND_NAME, ORDER_MONTH
```

Execution Screenshot:

	VEND_NAME	DaysPastDue
1	Ace Hardware	-30
2	Home Depot	-30
3	Kingston Lumber	-30
4	Lowes	-30
5	Pyles Lumber Company	-30
6	Steelworks	-20

4. Write an insert statement or series of insert statements if necessary, to insert data into the required tables when a bid is entered.

SQL Script:... (*Existing customer Allison Zeigler CUST_ID: 76 has requested new bid from Bob)*

```
INSERT INTO BID (BID_NUM, CUST_ID, BID_HOURS, BID_PARTS, BID_TOTAL, BID_MONTH)
VALUES (331, (SELECT CUST_ID FROM CUSTOMER WHERE CUST_ID = '76'), 150.00, 200.50, 350.50, 11)
```

Execution Screenshot:

	BID_NUM	CUST_ID	BID_HOURS	BID_PARTS	BID_TOTAL	BID_MONTH
1	199	76	145.00	180.00	325.00	10
2	208	81	325.00	224.75	549.75	8
3	279	120	35.00	45.50	80.50	10
4	316	142	120.00	125.00	245.00	9
5	325	155	50.00	155.50	205.50	8
6	326	156	35.00	387.50	422.50	9
7	327	157	85.00	493.88	578.88	10
8	328	158	96.00	515.45	611.45	10
9	329	159	18.00	145.11	163.11	10
10	330	160	13.00	76.05	89.05	7
11	331	76	150.00	200.50	350.50	11

OR... Creating a new bid for a NEW customer:

SQL Script:

```
INSERT INTO CUSTOMER (CUST_ID, CUST_FNAME, CUST_LNAME, CUST_PHONE, CUST_EMAIL)
VALUES (77, 'James', 'Cameron', '513-386-5411', 'moviebuff11@gmail.com')

INSERT INTO BID (BID_NUM, CUST_ID, BID_HOURS, BID_PARTS, BID_TOTAL, BID_MONTH)
VALUES (332, (SELECT CUST_ID FROM CUSTOMER WHERE CUST_ID = '77'), 125.00, 345.50, 470.50, 11)
```

Execution Screenshots:

	CUST_ID	CUST_FNAME	CUST_LNAME	CUST_PHONE	CUST_EMAIL
1	76	Allison	Zeigler	321-464-1968	a.zeigler@comcast.com
2	77	James	Cameron	513-386-5411	moviebuff11@gmail.com
3	81	Trey	Williams	513-245-8156	bballstar1@hotmail.com
4	120	Brett	Forward	407-843-4742	movingforwardB@gmail.com
5	142	Rebecca	Tennant	321-544-3510	Rebecca.E.Tennant@yahoo.com
6	155	James	Anderson	407-924-3165	janderson55@gmail.com
7	156	Ralph	Senior	810-854-0205	ralph.senior@yahoo.com
8	157	David	Washington	250-528-0937	dwash@gmail.com
9	158	Maria	Arbough	658-995-7845	marbough@icloud.com
10	159	Anne	Smith	744-888-5308	smithanne@outlook.com
11	160	Larry	Ramoras	416-803-3120	l.ramoras@yahoo.com

	BID_NUM	CUST_ID	BID_HOURS	BID_PARTS	BID_TOTAL	BID_MONTH
1	199	76	145.00	180.00	325.00	10
2	208	81	325.00	224.75	549.75	8
3	279	120	35.00	45.50	80.50	10
4	316	142	120.00	125.00	245.00	9
5	325	155	50.00	155.50	205.50	8
6	326	156	35.00	387.50	422.50	9
7	327	157	85.00	493.88	578.88	10
8	328	158	96.00	515.45	611.45	10
9	329	159	18.00	145.11	163.11	10
10	330	160	13.00	76.05	89.05	7
11	331	76	150.00	200.50	350.50	11
12	332	77	125.00	345.50	470.50	11

5. **Write a delete statement(s) to delete a particular customer from the customer table (make sure to delete any corresponding rows in other tables).**

SQL Script: (*Tables were setup with ON DELETE CASCADE to allow simple deletion*)

```
DELETE FROM CUSTOMER
WHERE CUST_ID = '159'
```

Execution Screenshots:

	CUST_ID	CUST_FNAME	CUST_LNAME	CUST_PHONE	CUST_EMAIL
1	76	Allison	Zeigler	321-464-1968	a.zeigler@comcast.com
2	81	Trey	Williams	513-245-8156	bballstar1@hotmail.com
3	120	Brett	Forward	407-843-4742	movingforwardB@gmail.com
4	142	Rebecca	Tennant	321-544-3510	Rebecca.E.Tennant@yahoo.com
5	155	James	Anderson	407-924-3165	janderson55@gmail.com
6	156	Ralph	Senior	810-854-0205	ralph.senior@yahoo.com
7	157	David	Washington	250-528-0937	dwash@gmail.com
8	158	Maria	Arbough	658-995-7845	marbough@icloud.com
9	160	Larry	Ramoras	416-803-3120	l.ramoras@yahoo.com

	BID_NUM	CUST_ID	BID_HOURS	BID_PARTS	BID_TOTAL
1	199	76	145.00	180.00	325.00
2	208	81	325.00	224.75	549.75
3	279	120	35.00	45.50	80.50
4	316	142	120.00	125.00	245.00
5	325	155	50.00	155.50	205.50
6	326	156	35.00	387.50	422.50
7	327	157	85.00	493.88	578.88
8	328	158	96.00	515.45	611.45
9	330	160	13.00	76.05	89.05

	JOB_NUM	BID_NUM	JOB_LABOR_HRS	JOB_PARTS_TOTAL
1	505	199	145.00	182.50
2	518	208	300.00	217.50
3	586	279	40.00	79.50
4	600	316	115.00	148.00
5	614	325	75.50	155.50
6	615	326	40.50	387.50
7	616	327	75.00	420.15
8	617	328	96.00	520.45
9	619	330	13.00	74.10

	INVOICE_NUM	JOB_NUM	INVOICE_TOTAL	INVOICE_DATE	INVOICE_DUE_DATE	INVOICE_CUST_PAID_DATE
1	530	505	327.50	2022-10-20	2022-11-20	NULL
2	556	518	517.50	2022-08-05	2022-09-05	NULL
3	592	586	119.50	2022-10-03	2022-11-03	2022-10-14
4	602	600	263.00	2022-09-12	2022-10-12	2022-09-30
5	655	614	231.00	2022-08-13	2022-09-13	2022-09-25
6	656	615	428.00	2022-09-14	2022-10-14	2022-09-29
7	657	616	495.65	2022-10-18	2022-11-18	2022-10-25
8	658	617	616.45	2022-10-24	2022-11-24	NULL
9	670	619	87.10	2022-07-01	2022-08-01	2022-08-18

Star Schema Sample Queries:

Below are query examples used to obtain information from the created Star Schema. These are only a few of the many queries that can be created for your business needs.

- Return the total price of material by supplier.

  SQL Script:

```
SELECT
   vend_name, SUM(part_order_total) AS Material_Total
FROM
   SUPPLIER,
   ORDERFACTS
WHERE
   SUPPLIER.supplier_key = ORDERFACTS.supplier_key
GROUP BY
    vend_name
```

- Return the avg price of material by supplier.

  SQL Script:

```
SELECT
   vend_name, AVG(part_order_total) AS Material_Average
FROM
   SUPPLIER,
   ORDERFACTS
WHERE
   SUPPLIER.supplier_key = ORDERFACTS.supplier_key
GROUP BY
    vend_name
```

- Return the total price of material by supplier and month.

  SQL Script:

```
SELECT
   vend_name, SUM(part_order_total) AS Material_Total, part_order_month
```

```
FROM
   SUPPLIER,
   ORDERFACTS,
   DATE
WHERE
   SUPPLIER.supplier_key = ORDERFACTS.supplier_key AND
   DATE.date_key = ORDERFACTS.date_key
GROUP BY
    vend_name, part_order_month
```

- Return the total price of material by job having a total price greater than $100.

  SQL Script:

```
SELECT
   job_num, SUM(part_order_total) AS Material_Total
FROM
   SUPPLIER,
   JOB,
   ORDERFACTS
WHERE
   SUPPLIER.supplier_key = ORDERFACTS.supplier_key AND
   JOB.job_key = ORDERFACTS.job_key
GROUP BY
   job_num
HAVING
   SUM(part_order_total) > 100
```

- Return the total price of material by supplier where the amount is greater than 10.

  SQL Script:

```
SELECT
   vend_name, SUM(part_order_total) AS Material_Total, part_quantity_ordered
FROM
   SUPPLIER,
   ORDERFACTS
WHERE
   SUPPLIER.supplier_key = ORDERFACTS.supplier_key AND
   part_quantity_ordered > 10
GROUP BY
   vend_name, part_quantity_ordered
```